316 Stainless Steel Ball Valve - 3 Piece

Lever - Full Flow - F & F

PRODUCT DATASHEET

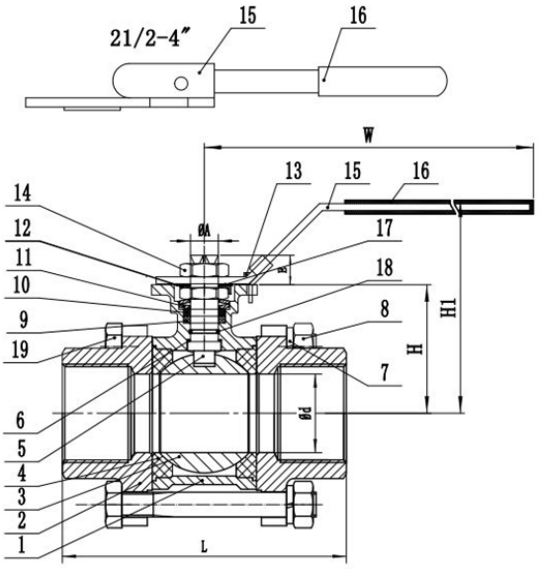

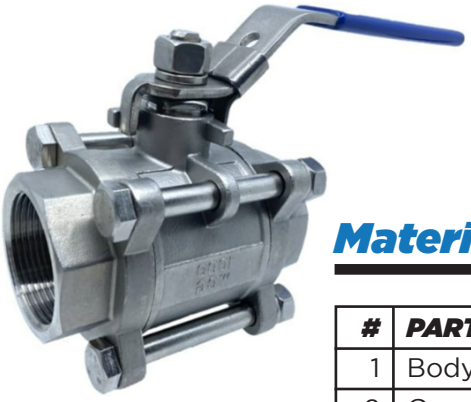

Materials

#	PART	MATERIAL
1	Body	CF8M Stainless Steel
2	Cap	CF8M Stainless Steel
3	Ball	CF8M Stainless Steel
4	Seat	PTFE
5	Stem	316 Stainless Steel
6	Thrust Washer	PTFE
7	Spring Washer	304 Stainless Steel
8	Bolt Nut	304 Stainless Steel
9	Stem Packing	PTFE
10	Ring	304 Stainless Steel
11	Belleville Washer	301 Stainless Steel
12	Lock Washer	304 Stainless Steel
13	Stop Pin	304 Stainless Steel
14	Handle Nut	304 Stainless Steel
15	Handle	304 Stainless Steel
16	Handle Sleeve	Plastic
17	Washer	304 Stainless Steel
18	O-ring	Viton
19	Bolt	304 Stainless Steel

Specifications

- Max Working Pressure: 1000 psi (6895 kPa)
- Max Working Temperature: 180°C
- Thread: BSP to ISO 228-1

Features

- Suitable for isolating hot & cold non-potable water, oil and gas
- Commonly used in the food processing and chemical service industries
- Comes with a locking device on the lever
- The three-piece body allows for the valve to be serviced and cleaned

Dimensions *(mm)*

Size	d	L	H	D	E	A	ISO5211	W	H1
8mm (1/4")	11.6	55	38.5	9	9	12	F04/03	143	70
10mm (3/8")	12.5	60	38.5	9	9	12	F04/03	143	70
15mm (1/2")	15	75	38.5	9	9	12	F04/03	143	70
20mm (3/4")	20	80	47.5	9	9	12	F04/03	143	79
25mm (1")	25	90	59	11	11	14	F04/03	163	95
32mm (11/4")	32	110	63.5	11	11	14	F04/03	163	100
40mm (11/2")	38	120	79	14	15	18	F04/03	188	116
50mm (2")	50	140	86.5	14	15	18	F04/03	188	124
65mm (21/2")	64	162	109.1	17	17	22	F04/03	350	141
80mm (3")	76	184	117	17	17	22	F04/03	350	149
100mm (4")	94	228	136	22	22	28	F04/03	350	173

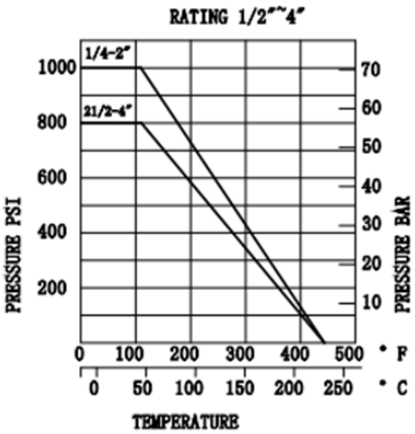

Warranty

24 months

For Further Information

info@valvewarehouseaustralia.com.au

03 9421 0042

Valve Warehouse ABN 33 632 515 149